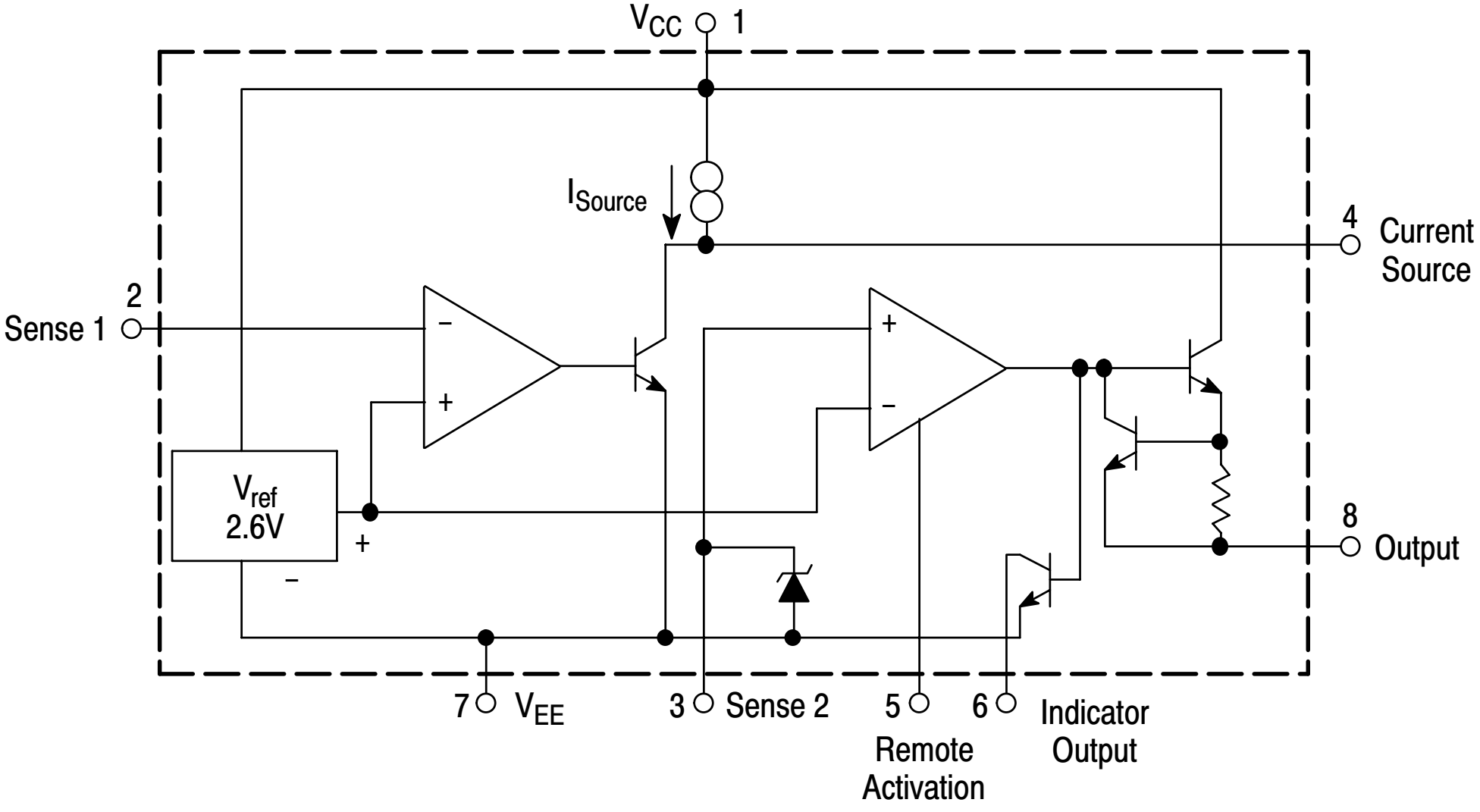

Figure 2. Representative Block Diagram